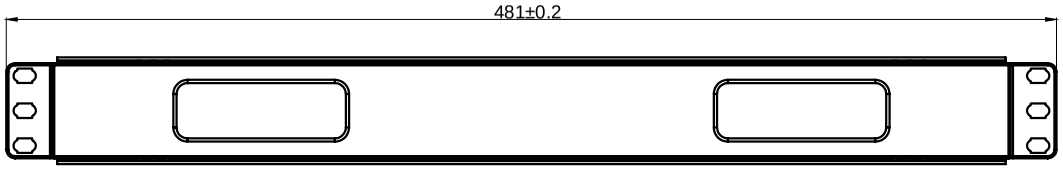

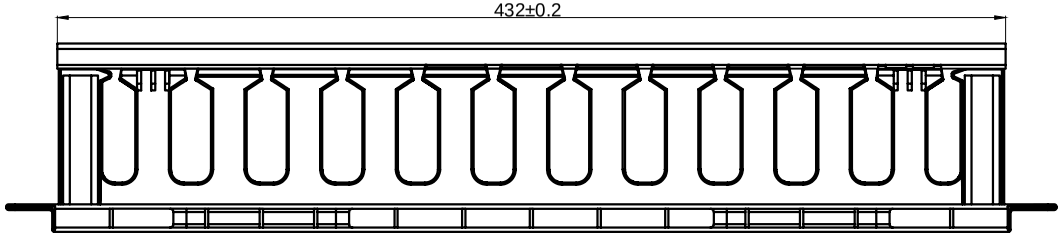

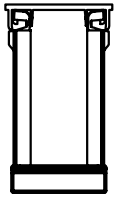

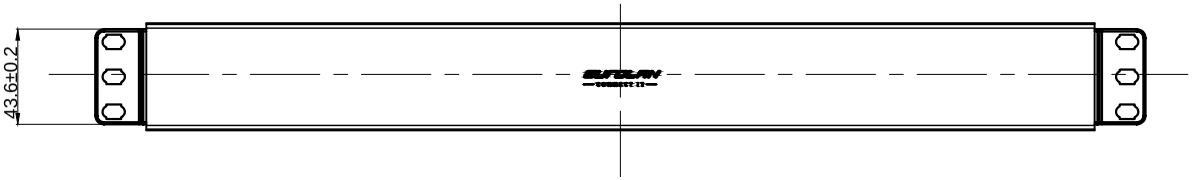

35

EUROLAN
CONNECT IT

4:1

1:1

481±0.2
6.8
77.5+0.2 −0.1
25.3+0.2 −0.1
43.6±0.2
6.6
32
R2.7
10.2
247.5

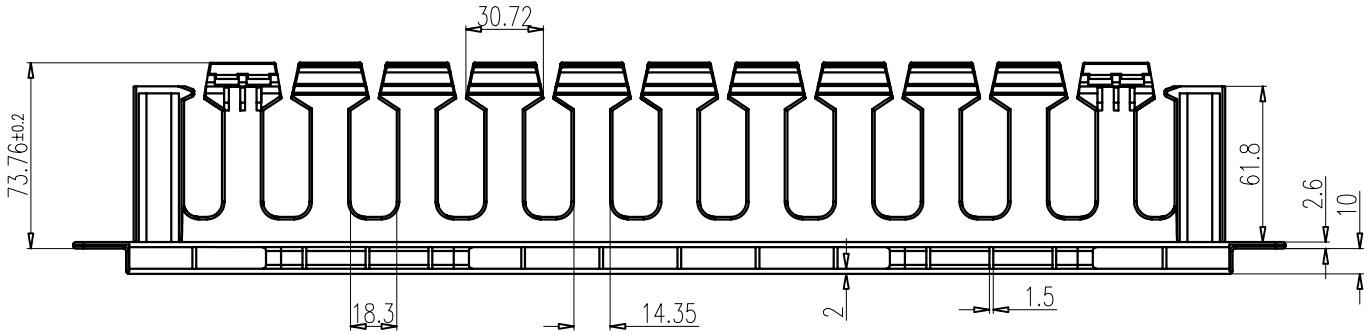
30.72
73.76±0.2
61.8
2.6
10
18.3
14.35
2
1.5

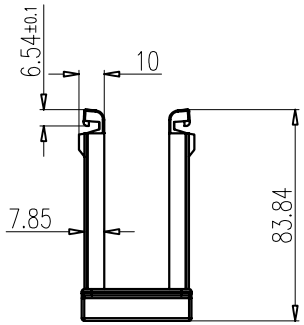
6.54±0.1
10
7.85
83.84

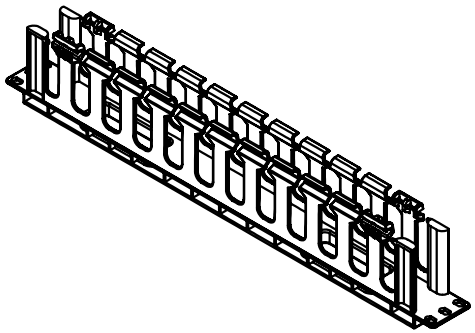

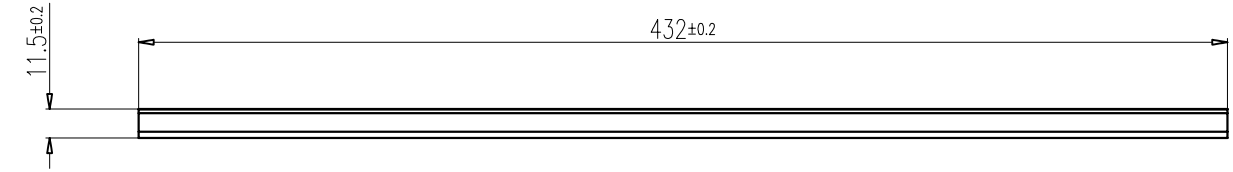
11.5±0.2
432±0.2

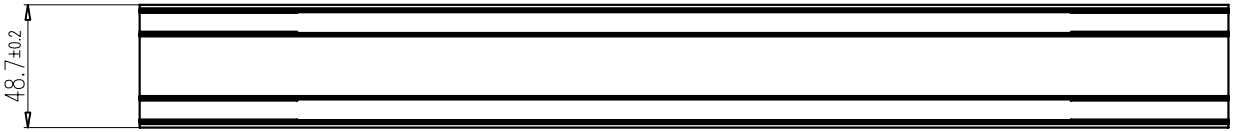
48.7±0.2

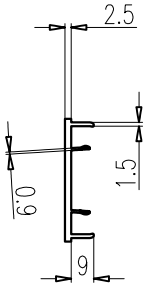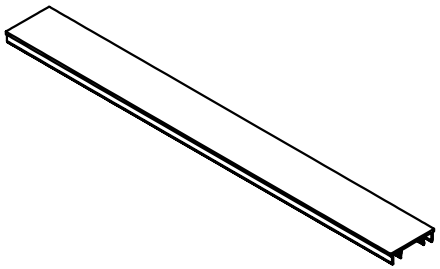
2.5
1.5
6.0
9