△C FTP外被印刷:HIGH FLEX INDUSTRIAL ETHERNET CABLE 4PR/26 75°C SUN RES
OIL RES CM ETL VERIFIED TO ANSI/TIA-568-C.2 Cat 6 PATCH CABLE---FTP

△C UTP外被印刷:HIGH FLEX INDUSTRIAL ETHERNET CABLE 4PR/24 75°C SUN RES
OIL RES CM ETL VERIFIED TO ANSI/TIA-568-C.2 Cat 6 PATCH CABLE---UTP

REVISIONS

ZONE	REV	DESCRIPTION	DATE	DRAWN
	A	EG04046新產品技術移轉	7/22/2004	JACKY HUANG
	B	ECN單號:ME08302	07/31'08	JASON
	C	變更線被印字,統一線被字型.ME12010	05/19'12	Yabe

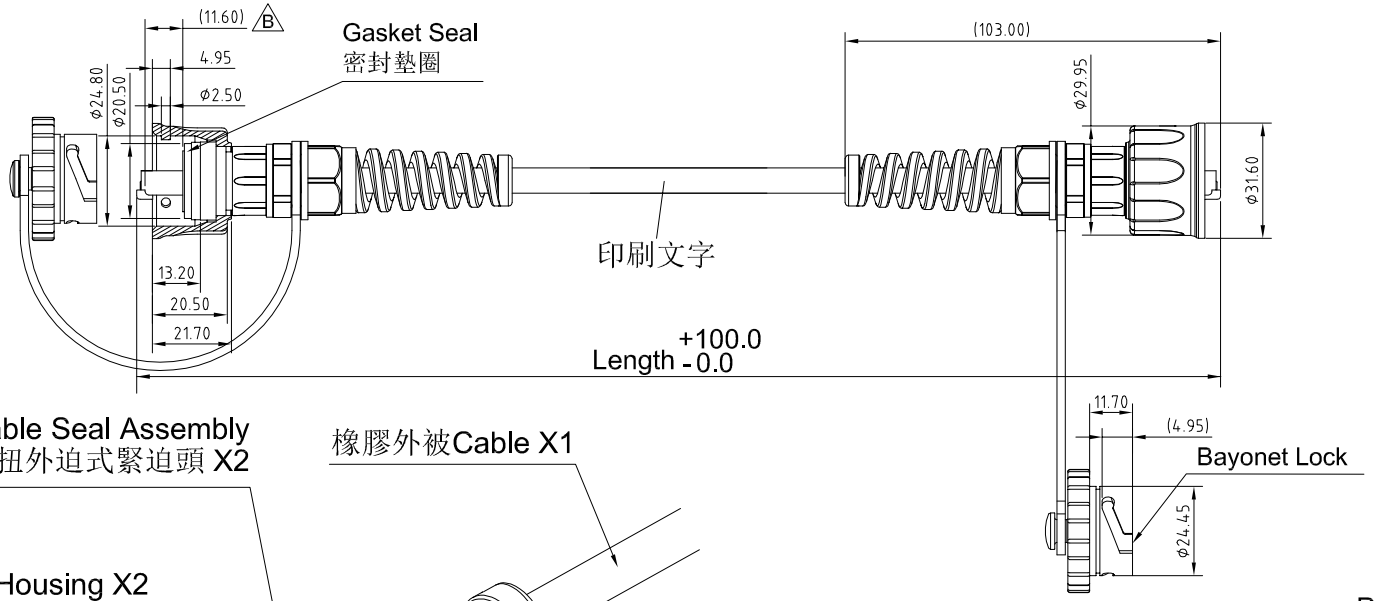

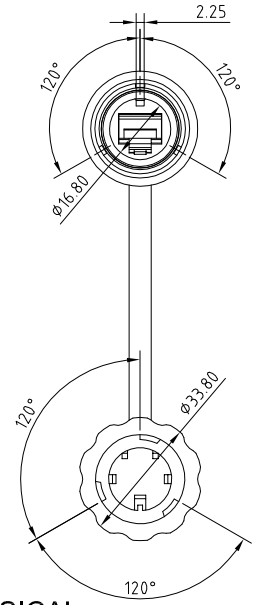

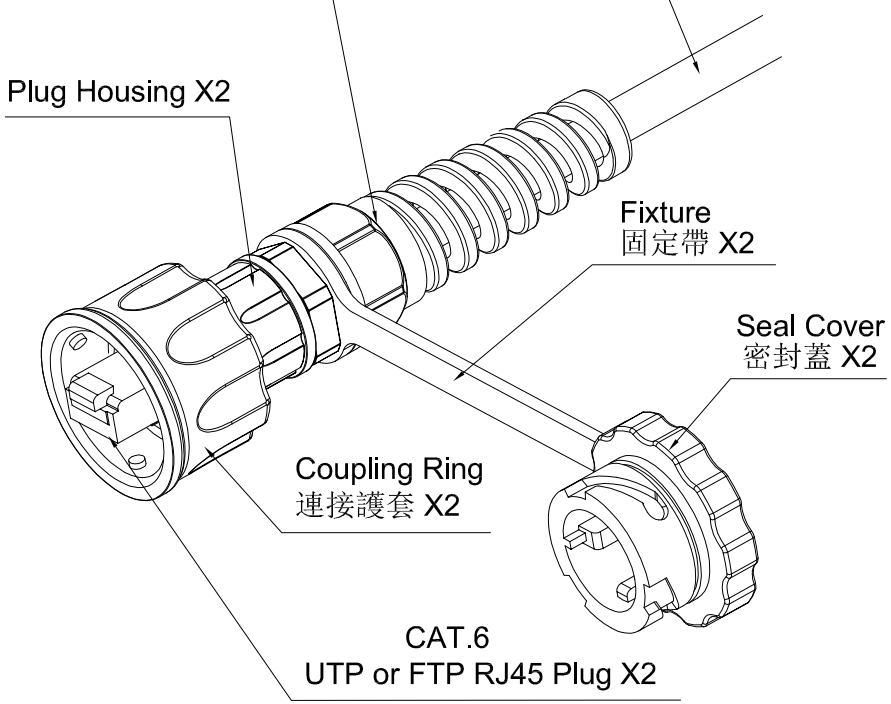

ENVIRONMENTAL CONDITIONS

Temperature Range
Storage -40 to +70°C
Operation -10 to +60°C
Relative Humidity (Operational) : Maximum Noncondedsing 93%

ELECTRICAL

Electrical Insulation Resistance : 500MΩ min. @ 100V d.c
Dielectric Withstanding Voltage : 1000V RMS @ 60Hz for 1 minute

MECHANICAL

Insertion / Extraction Life : 750 Cycles Minimum
Tensile Strength :≧ 20N per Wire

PHYSICAL

Housing : High-Impact, Flame-Retardant Plastic, UL 94V0

CONTACT : Phosphor Bronze Alloy Plated With 50 micro-inch of Gold Over 100 micro-inch of Nickel

Shield Shell : Brass Alloy Plated with 50 micro-inch Nickel (FTP only)

International Protection Code meet IP67

FTP料號:LC4PRXM(F)XIXX-R6TG-1
UTP料號:LC4PRXM(F)XIXX-RH-1

UNLESS OTHERWISE SPECIFIED: TOLERANCES
INCH .X ± .016 .XX ± .008 .XXX ± .004
MM .X ± 0.2 .XX ± 0.1
ANGULAR .X ± 1° .X ± .5°

MATERIAL
SURFACE
FINISH

PROJECT ID 21P-U6-XXBL
FILE Z1629.DWG
DATE
DRAWN JACKY HUANG 7/22/2004
CHECK
APPROVED

EUROLAN

TITLE IP 67 C6 UTP patch cord

SIZE A4 | DRAWING NUMBER Z1629 | PART NUMBER | REV C
SCALE | UNIT mm | SHEET 1 of 1